Solenoid Valves Flow Characteristics
(How to indicate flow characteristics)

1. Indication of flow characteristics

Indication of the flow characteristics in specifications for equipment such as solenoid valve, etc. is depending on "Table (1)"

Table (1) Indication of Flow Characteristics

Corresponding equipment	Indication by international standard	Other indications	Standards conforming to
Equipment for pneumatics	*C*, *b*	—	ISO 6358: 1989 JIS B 8390: 2000
	—	*S*	JIS B 8390: 2000 Equipment: JIS B 8373, 8374, 8375, 8379, 8381
		Cv	ANSI/(NFPA)T3.21.3: 1990
Equipment for controlling process fluids	*Av*	—	IEC60534-2-3: 1997 JIS B 2005: 1995 Equipment: JIS B 8471, 8472, 8473
	—	*Cv*	

2. Equipment for pneumatics

2.1 Indication according to the international standards

(1 Standards conforming to

ISO 6358: 1989 **Pneumatic fluid power—Components using compressible fluids—Determination of flow-rate characteristics**

JIS B 8390: 2000 **Pneumatic fluid power—Components using compressible fluids—How to test flow rate characteristics**

(2) Definition of flow characteristics

Flow rate characteristics are indicated as a result of a comparison between sonic conductance *C* and critical pressure ratio *b*.

Sonic conductance *C*	Values which divide the passing mass flow rate of an equipment in a choked flow condition by the product of the upstream absolute pressure and the density in the standard condition
Critical pressure ratio *b*	It is the pressure ratio which will turn to the choke flow (downstream pressure/upstream pressure) when it is smaller than this values. (critical pressure ratio)
Choked flow	It is the flow in which the upstream pressure is higher than the downstream pressure and where sonic speed in a certain part of an equipment is reached. Gaseous mass flow rate is in proportion to the upstream pressure and not dependent on the downstream pressure. (choked flow)
Subsonic flow	Flow greater than the critical pressure ratio
Standard condition	Air in a temperature state of 20°C, absolute pressure 0.1 MPa (= 100 kPa = 1 bar), relative humidity 65%. It is stipulated by adding the abbreviation (ANR) after the unit depicting air volume. (standard reference atmosphere) Standard conforming to: ISO 8778: 1990 Pneumatic fluid power—Standard reference atmosphere, JIS B 8393: 2000: Pneumatic fluid power—Standard reference atmosphere

(3) Formula of flow rate

It can be indicated by the practical unit as following.

When

$\frac{P_2 + 0.1}{P_1 + 0.1} \leq b$, **choked flow**

$$Q = 600 \times C\,(P_1 + 0.1)\sqrt{\frac{293}{273 + t}} \quad \cdots\cdots (1)$$

When

$\frac{P_2 + 0.1}{P_1 + 0.1} > b$, **subsonic flow**

$$Q = 600 \times C\,(P_1 + 0.1)\sqrt{1 - \left[\frac{\frac{P_2 + 0.1}{P_1 + 0.1} - b}{1 - b}\right]^2}\sqrt{\frac{293}{273 + t}} \quad (2)$$

Q Air flow rate [dm³/min (ANR)], dm³ (Cubic decimeter) of SI unit are also allowed to described by ℓ (liter). 1 dm³ = 1 ℓ.

C Sonic conductance [dm³/(s·bar)]
b Critical pressure ratio [—]
P_1 Upstream pressure [MPa]
P_2 Downstream pressure [MPa]
t Temperature [°C]
Note) Formula of subsonic flow is the elliptic analogous curve.
Flow characteristics curve is indicated in the Graph (1) For details, please use SMC's "Energy Saving Program"

Example)
Obtain the air flow rate for P_1 = 0.4 [MPa], P_2 = 0.3 [MPa], t = 20 [°C] when a solenoid valve is performed in C = 2 [dm³/(s·bar)] and b = 0.3.

According to formula 1, the maximum flow rate = $600 \times 2 \times (0.4 + 0.1) \times \sqrt{\dfrac{293}{273 + 20}}$ = 600 [dm³/min (ANR)]

Pressure ratio = $\dfrac{0.3 + 0.1}{0.4 + 0.1}$ = 0.8

Based on the Graph (1), it is going to be 0.7 if it is read by the pressure ratio as 0.8 and the flow ratio to be b = 0.3.
Hence, flow rate = Max. flow x flow ratio = 600 x 0.7 = 420 [dm³/min (ANR)]

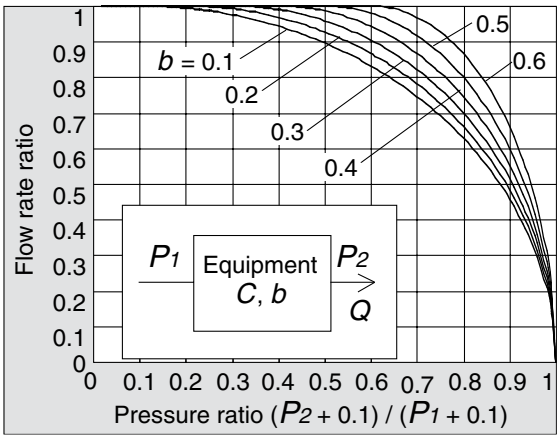

Graph (1) Flow characteristics line

(4) Test method
By attaching a test equipment with the test circuit indicated in Fig. (1 while maintaining to a certain amount which does not let the upstream pressure go down below 0.3 MPa, measure the maximum flow to be saturated in the first place. Next, measure this flow rate at 80%, 60%, 40%, 20% and the upstream and downstream pressure. And then, obtain the sonic conductance C from this maximum flow rate. Besides that, substitute each data of others for the formula of subsonic flow in order to find b, then obtain the critical pressure ratio b from that average.

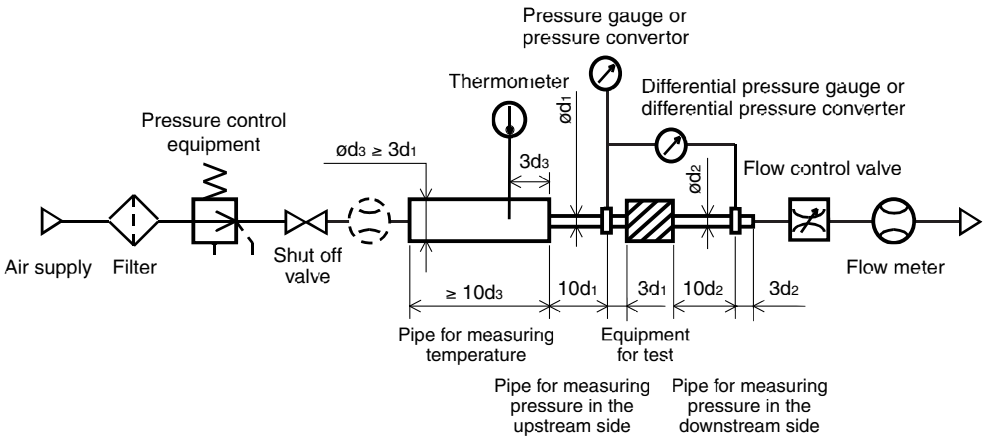

Fig. (1) Test circuit based on ISO 6358, JIS B 8390

2.2 Effective area *S*

(1) Standards conforming to

JIS B 8390: 2000: Pneumatic fluid power—Components using compressible fluids—Determination of flow rate characteristics

Equipment standards: JIS B 8373: 2 port solenoid valve for pneumatics
JIS B 8374: 3 port solenoid valve for pneumatics
JIS B 8375: 4 port, 5 port solenoid valve for pneumatics
JIS B 8379: Silencer for pneumatics
JIS B 8381: Fittings of flexible joint for pneumatics

(2) Definition of flow characteristics

Effective area *S*: is the cross-sectional area having an ideal throttle without friction deduced from the calculation of the pressure changes inside an air tank or without reduced flow when discharging the compressed air in a choked flow, from an equipment attached to the air tank. This is the same concept representing the "easy to run through" as sonic conductance *C* (effective area).

(3) Formula of flow rate

When

$\frac{P_2 + 0.1}{P_1 + 0.1} \leq 0.5$, **choked flow**

$$Q = 120 \times S\,(P_1 + 0.1)\sqrt{\frac{293}{273 + t}} \quad \cdots\cdots (3)$$

When

$\frac{P_2 + 0.1}{P_1 + 0.1} > 0.5$, **subsonic flow**

$$Q = 240 \times S\sqrt{(P_2 + 0.1)(P_1 - P_2)}\sqrt{\frac{293}{273 + t}} \quad \cdots\cdots (4)$$

Conversion with sonic conductance *C*:

$$S = 5.0 \times C \quad \cdots\cdots (5)$$

Q :Air flow rate[dm^3/min(ANR)], dm^3 (cubic decimeter) of SI unit is good to be described by ℓ (liter), too. 1 dm^3 = 1 ℓ
S : Effective area [mm^2]
P_1 : Upstream pressure [MPa]
P_2 : Downstream pressure [MPa]
t : Temperature [°C]

Note) Formula for subsonic flow (4) is only applicable when the critical pressure ratio *b* is the unknown equipment. In the formula by sonic conductance *C* (2), it is the same formula when *b* = 0.5.

(4) Test method

By attaching the equipment for testing with the test circuit shown in Fig. (2), discharge air into the atmosphere until the pressure inside the air tank goes down to 0.25 MPa (0.2 MPa) from an air tank filled with compressed air of a certain pressure (0.5 MPa) which does not go down below 0.6 MPa. At this time, measure the discharging time and the residual pressure inside the air tank which had been left until it turned to be the normal values, and then determine the effective area *S* by using the following formula. The volume of air tank should be selected within the specified range by corresponding to the effective area of the equipment being tested. In the case of JIS B 8373, 8374, 8375, 8379, 8381, the pressure values are in parentheses and the coefficient of formula is 12.9.

$$S = 12.1\,\frac{V}{t}\log_{10}\left(\frac{P_s + 0.1}{P + 0.1}\right)\sqrt{\frac{293}{T}} \quad \cdots\cdots (6)$$

S : Effective area [mm^2]
V : Air tank capacity [dm^3]
t : Discharging time [s]
Ps : Pressure inside air tank before discharging [MPa]
P : Residual pressure inside air tank after discharging [MPa]
T : Temperature inside air tank before discharging [K]

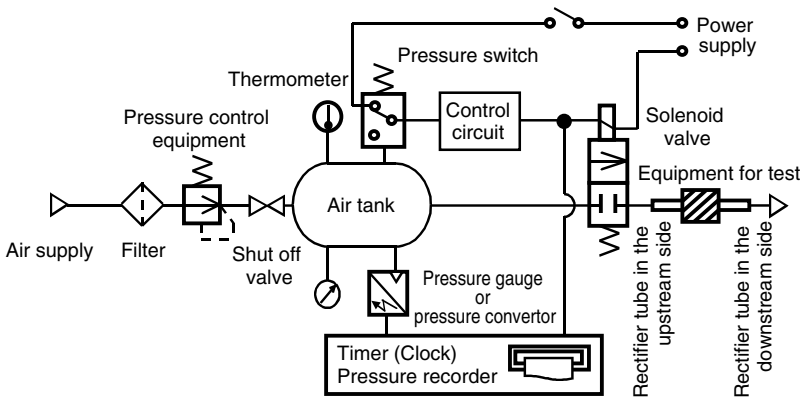

Fig. (2) Test circuit based on JIS B 8390

2.3 Flow coefficient *Cv* factor

The United States Standard ANSI/(NFPA)T3.21.3:1990: Pneumatic fluid power—Flow rating test procedure and reporting method for fixed orifice components

defines the Cv factor of flow coefficient by the following formula which is based on the test conducted by the test circuit analogous to ISO 6358.

$$Cv = \frac{Q}{114.5\sqrt{\frac{\Delta P\,(P_2 + P_a)}{T_1}}} \quad \cdots\cdots (7)$$

ΔP Pressure drop between the static pressure tapping ports [bar]
P_1 Pressure of the upstream tapping port [bar gauge]
P_2 Pressure of the downstream tapping port [bar gauge]: $P_2 = P_1 - \Delta P$
Q Flow rate [dm³/s standard condition]
Pa Atmospheric pressure [bar absolute]
T_1 Test conditions of the upstream absolute temperature [K]
is < $P_1 + P_a = 6.5 \pm 0.2$ bar absolute, $T_1 = 297 \pm 5$K, 0.07 bar $\leq \Delta P \leq$ 0.14 bar.

This is the same concept as effective area A which ISO6358 stipulates as being applicable only when the pressure drop is smaller than the upstream pressure and the compression of air does not become a problem.

3. Equipment for process fluids

(1 Standards conforming to

IEC60534-2-3: 1997· Industrial process control valves. Part 2: Flow capacity, Section Three-Test procedures

JIS B 2005: 1995: Test method for the flow coefficient of a valve

Equipment standards: JIS B 8471 Regulator for water
JIS B 8472: Solenoid valve for steam
JIS B 8473: Solenoid valve for fuel oil

(2) Definition of flow characteristics

Av factor: Value of the clean water flow rate represented by m³/s which runs through a valve (equipment for test) when the pressure difference is 1 Pa. It is calculated using the following formula.

$$Av = Q\sqrt{\frac{\rho}{\Delta P}} \quad \cdots\cdots (8)$$

Av Flow coefficient [m²]
Q Flow rate [m³/s]
ΔP Pressure difference [Pa]
ρ Density of fluid [kg/m³]

(3) Formula of flow rate

It is described by the known unit. Also, the flow characteristics line shown in the Graph (2).

In the case of liquid:

$$Q = 1.9 \times 10^6 Av\sqrt{\frac{\Delta P}{G}} \quad \cdots\cdots (9)$$

Q Flow rate [ℓ/min]
Av Flow coefficient [m²]
ΔP Pressure difference [MPa]
G Relative density [water = 1]

In the case of saturated aqueous vapor:

$$Q = 8.3 \times 10^6 Av\sqrt{\Delta P(P_2 + 0\ 1} \quad \cdots\cdots (10)$$

Q Flow rate [m³/s]
Av Flow coefficient [m²]
ΔP Pressure difference [Pa]
P_1 Relative density [MPa]: $\Delta P = P_1 \quad P_2$
P_2 Relative density [MPa]

Solenoid Valves Flow Characteristics

Conversion of flow coefficient:

$Av = 28 \times 10^{-6}\ Kv = 24 \times 10^{-6} Cv$ .....(11)

Here,

Kv factor: Value of the clean water flow rate represented by the m^3/h which runs through the valve at 5 to 40°C, when the pressure difference is 1 bar.

Cv factor (Reference values): It is the figures representing the flow rate of clean water by US gal/min which runs through the valve at 60°F, when the pressure difference is 1 lbf/in^2 (psi).

Values of pneumatic Kv are different from Cv because the testing method is different from each other.

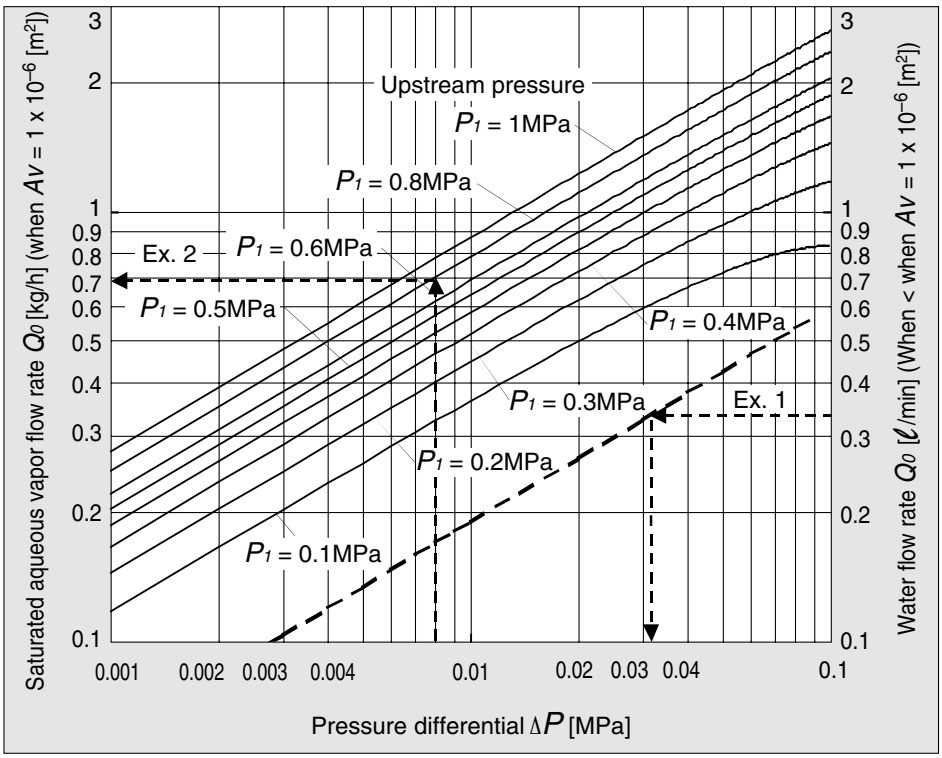

Graph (2) Flow characteristics line

Example 1

Obtain the pressure difference when water 15 [ℓ/min] runs through the solenoid valve with an $Av = 45 \times 10^{-6}$ [m^2].

Since Q_0 = 15/45 = 0.33 [/min], according to the Graph (2), if reading ΔP when Q_0 is 0 33, it will be 0 031 [MPa].

Example 2)

Obtain the flow rate of saturated aqueous vapor when P_1 = 0.8 [MPa], ΔP = 0.008 [MPa] with a solenoid valve with an Av =1.5 x 10^{-6} [m^2].

According to the Graph (2), if reading Q_0 when P_1 is 0.8 and ΔP is 0.008, it is 0 7 [kg/h] Hence, the flow rate Q = 0.7 x 1.5 = 1.05 [kg/h].

(4) Test method

By attaching the equipment for testing with the test circuit shown in Fig. (3) and running water at 5 to 40°C, measure the flow rate with a pressure difference of 0.075 MPa. However, the pressure difference needs to be set with a large enough difference so that the Reynolds number does not go below a range of 4 x 10^4.

By substituting the measurement results for formula (8) to figure out *Av*.

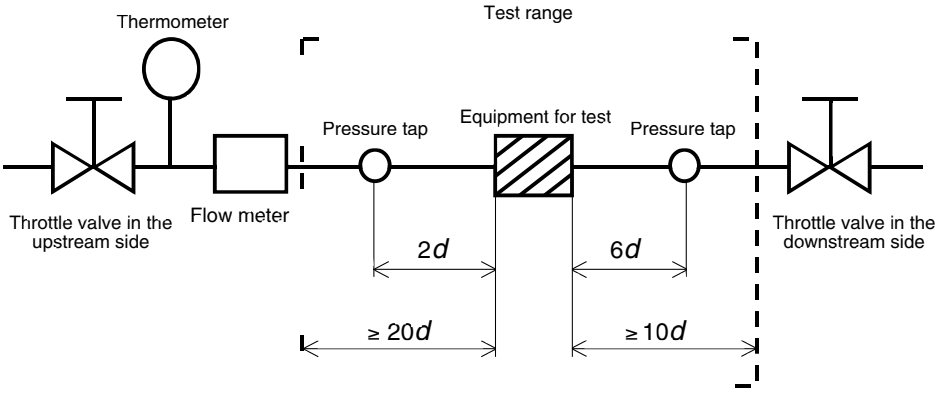

Fig. (3) Test circuit based on IEC60534-2-3, JIS B 2005

Flow Characteristics

Note) Use this graph as a guide. In the case of obtaining an accurate flow rate, refer to front matter pages 1 to 6.

For Air (Orifice size: ø10 mm, ø15 mm, ø20 mm, ø25 mm)

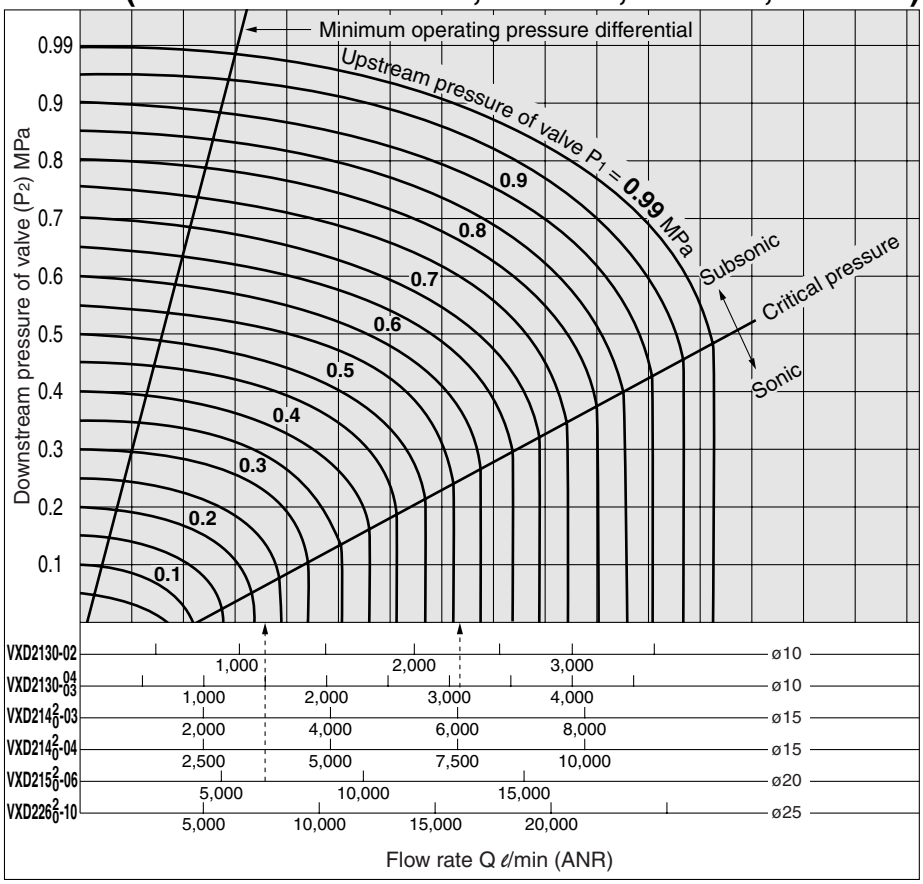

How to read the graph

The sonic range pressure to generate a flow rate of 6000 ℓ/min (ANR) is
$P_1 \approx 0.57$ MPa for a ø15 orifice (VXD214$^2_0$-03) and
$P_1 \approx 0.22$ MPa for a ø20 orifice (VXD215$^2_0$-06).

For Air (Orifice size: ø35 mm, ø40 mm, ø50 mm)

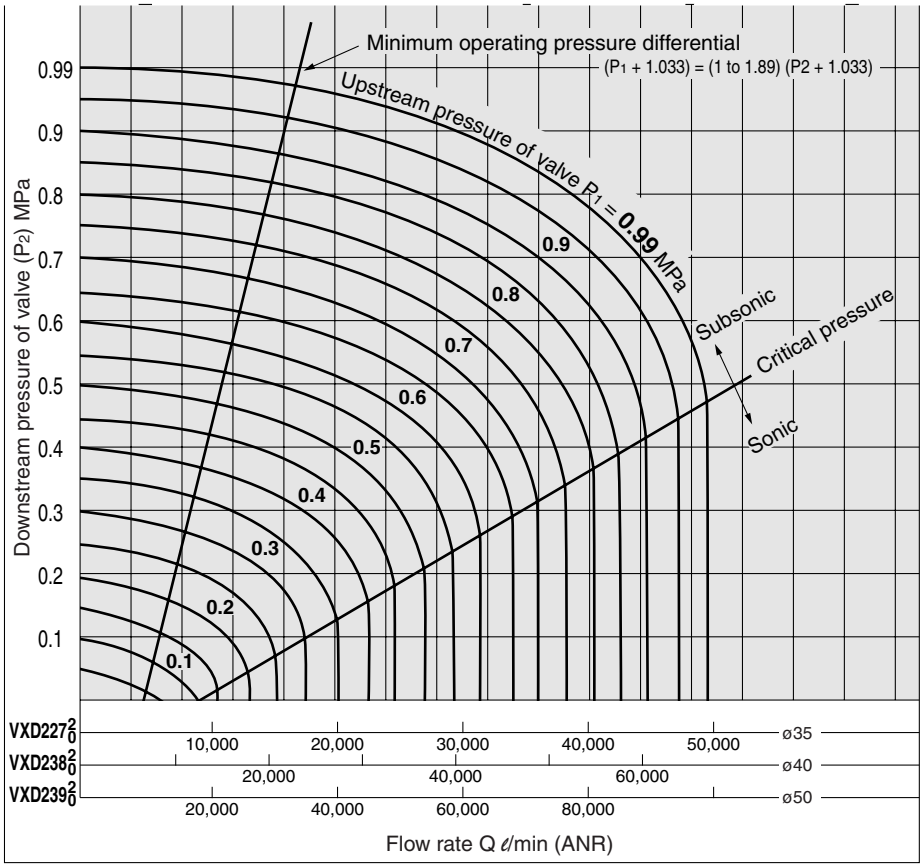

For Water

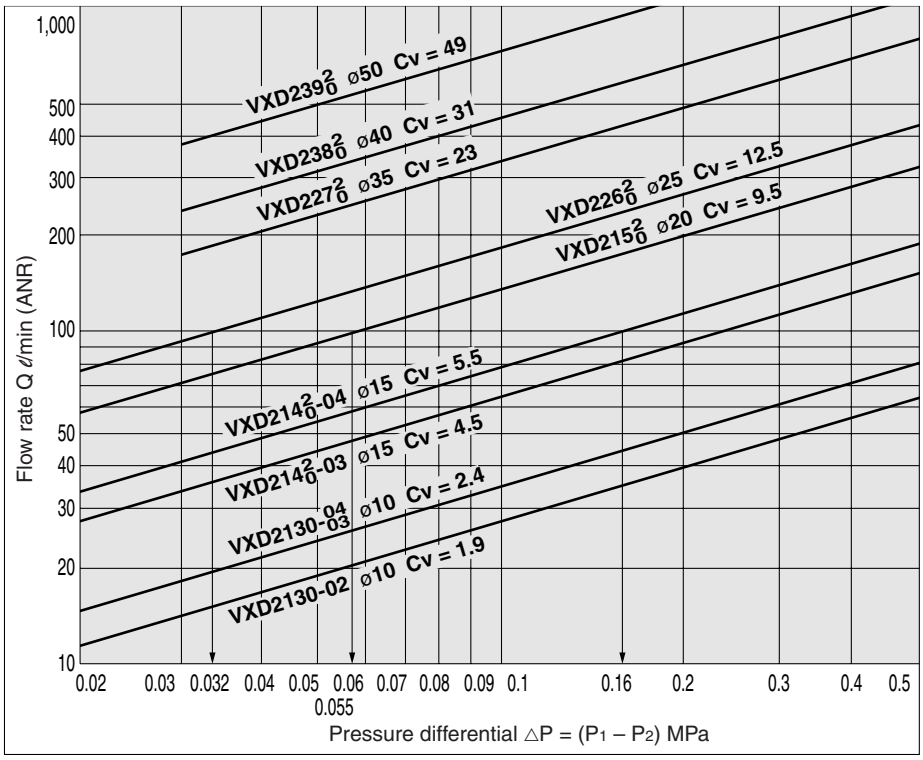

How to read the graph

When a water flow of 100 ℓ/min is generated,
△P ≈ 0.16 MPa for a ø15 orifice (VXD214 2/0-04),
△P ≈ 0.055 MPa for a ø20 orifice (VXD215 2/0), and
△P ≈ 0.032 MPa for a ø25 orifice (VXD226 2/0).

Applicable Fluid Check List

Pi ot Operated 2 Port Solenoid Valve *Series VXD21/22/23*

Normally closed (N.C.)

Option Symbol and Components

Option symbol	Seal material	Material Body: Shading coil	Coil insulation type	Note
Standard type	NBR	Brass (C37) or CAC407/Cu Note 1)	B	—
A	FKM			
B	EPDM			
D	FKM		H	
E	EPDM			
G	NBR	Stainless steel/Ag Note 3)	B	—
H	FKM			
J	EPDM			
L	FKM			High corrosion resistance, Oil-free
N	FKM		H	—
P	EPDM			

Fluid Name and Option

Fluid (Application)	Option symbol and body material	
	Note 1) Brass (C37) or CAC407	Note 3) Stainless steel
Applicable valve	10A to 50A	10A to 25A
Caustic soda (25% ≥)	—	J
Gas oil	A	H
Silicon oil	A	H
Steam system (Water for boiler)	—	G, J
Steam system (Condensation)	E	P
Perchloroethylene	A	H
Water (Max. 99°C)	D, E	N, P

Note 1) 10A to 25A are C37 and 32A to 50A are CAC407.
Note 2) The highest operating temperature of 32A to 50A is 80°C.
Note 3) Stainless steel/Ag is not available for valve sizes from 32A to 50A.
Note 4) Consult with SMC for other than above fluids.

Normally open (N.O.)

Option Symbol and Components

Option symbol	Seal material	Material: Body: Shading coil	Material: Inside bushing rod assembly	Coil insulation type	Note
Standard type	NBR	Brass (C37) or CAC407/Cu Note 1)	PPS	B	—
A	FKM				
B	EPDM				
D	FKM		Stainless steel	H	
E	EPDM				
G	NBR	Stainless steel/Ag Note 3)	PPS	B	
H	FKM				
J	EPDM				
L	FKM				High corrosion resistance, Oil-free
N	FKM		Stainless steel	H	—
P	EPDM				

Fluid Name and Option

Fluid (Application)	Option symbol and body material	
	Note 1) Brass (C37) or CAC407	Note 3) Stainless steel
Applicable valve	15A to 50A	15A to 25A
Caustic soda (25% ≥)	—	J
Gas oil	A	H
Silicon oil	A	H
Steam system (Water for boiler)	—	G, J
Steam system (Condensation)	E	P
Perchloroethylene	A	H
Water (Max. 99°C)	E	N, P

Note 1) 10A to 25A are C37 and 32A to 50A are CAC407.
Note 2) The highest operating temperature of 32A to 50A is 80°C.
Note 3) Stainless steel/Ag is not available for valve sizes from 32A to 50A.
Note 4) Consult with SMC for other than above fluids.

Glossary of Terms

Pressure Terminology

1 Maximum operating pressure differential

The maximum pressure differential (the difference between the inlet and outlet pressure) which is allowed for operation, with the valve closed. When the downstream pressure is 0 MPa, this becomes the maximum operating pressure.

2 Minimum operating pressure differential

The minimum pressure differential (differential between the inlet pressure and the outlet pressure) required to keep the main valve fully opened.

Note) If the pressure differential is the minimum operating pressure differential when the valve is closed, it may be below the minimum operating pressure differential when the valve is open.

3 Maximum system pressure

The maximum pressure that can be applied inside the pipelines (line pressure).
(The pressure differential of the solenoid valve unit must be less than the maximum operating pressure differential.)

4. Proof pressure

The pressure which must be withstood without a drop in performance after returning to the operating pressure range. (value under the prescribed conditions)

Electrical Terminology

1 Apparent power (VA)

Volt-ampere is the product of voltage (V) and current (A). Power dissipation (W): For AC, W = V•A•cosθ. For DC, W = V•A.

(Note) cosθ shows power factor. cosθ = 0.6

2 Surge voltage

A high voltage which is momentarily generated in the shut-off unit by shutting off the power

3 Degree of protection

A degree defined in the "JIS C 0920: Waterproof test of electric machinery/appliance and the degree of protection against the intrusion of solid foreign objects"

IP65: Dusttight, Low jetproof type

"Low jetproof type" means that no water intrudes inside an equipment that could hinder from operating normally by means of discharging water for 3 minutes in the prescribed manner. Take appropriate protection measures, since a device is not usable in an environment where a water drop is splashed.

Others

1 Material

NBR: Nitrile rubber

FKM: Fluoro rubber Trade names: Viton® Dai-el® etc.

EPDM: Ethylene propylene rubber

PTFE: Polytetrafluoroethylene resin Trade names: Teflon® Polyflon®, etc.

FFKM: Perfluoroelastomer
Trade names: Kalrez®, Chemraz®

2. Oil-free treatment

The degreasing and washing of wetted parts.

3. Passage symbol

In the JIS symbol) IN and OUT are in a blocked condition ( ), but actually in the case of reverse pressure (OUT>IN), there is a limit to the blocking.
( ) is used to indicate that blocking of reverse pressure is not possible.

Pilot Operated 2 Port Solenoid Valve

Series VXD21/22/23

For Water, Oil, Air

Sing e Unit

■ Valve

Normally closed (N.C.)
Normally open (N.O.)

■ Solenoid Coil

Coil: Class B, Class H

■ Rated Voltage

100 VAC, 200 VAC, 110 VAC,
220 VAC, 240 VAC, 230 VAC,
48 VAC, 24 VDC, 12 VDC

■ Material

Body	Brass (C37)/CAC407, Stainless steel
Seal	NBR, FKM, EPDM

■ Electrical Entry

- Grommet
- DIN terminal
- Conduit
- Conduit terminal

Model		VXD2130	VXD214$^{2}_{0}$	VXD215$^{2}_{0}$	VXD226$^{2}_{0}$
Body size	10A	●	—	—	—
	15A	—	●	—	—
	20A	—	—	●	—
	25A	—	—	—	●
Port size (Thread)		¼, ⅜, ½	⅜, ½	¾	1

Model		VXD227$^{2}_{0}$	VXD238$^{2}_{0}$	VXD239$^{2}_{0}$
Body size	32A	●	—	—
	40A	—	●	—
	50A	—	—	●
Port size (Flange)		32A	40A	50A

Standard Specifications

Valve specifications	Valve construction		Pilot operated 2 port diaphragm type
	Withstand pressure (MPa)		5.0
	Body material		Brass (C37), Stainless steel, CAC407
	Seal material		NBR, FKM, EPDM
	Enclosure		Dusttight, Low jetproof (equivalent to IP65) Note 1)
	Environment		Location without corrosive or explosive gases
Coil specifications	Rated voltage	AC (Class B coil, with a full-wave rectifier)	100 VAC, 200 VAC, 110 VAC, 220 VAC, 230 VAC, 240 VAC, 48 VAC
		AC (Class B coil/H coil) Note 2)	
		DC (Class B coil only)	24 VDC, 12 VDC
	Allowable voltage fluctuation		±10% of rated voltage
	Allowable leakage voltage	AC (Class B coil, with a full-wave rectifier)	±10% or less of rated voltage
		AC (Class B coil/H coil) Note 2)	±20% or less of rated voltage
		DC (Class B coil only)	±2% or less of rated voltage
	Coil insulation type		Class B, Class H

Note 1) Electrical entry, Grommet with surge voltage suppressor (GS) has a rating of IP40.
Note 2) The AC (Class B) coil for the VXD2130 comes with a full-wave rectifier.

Solenoid Coil Specifications

Note) The values are for an ambient temperature of 20°C and at the rated voltage.

DC Specification

Model	Power consumption (W)	Temperature rise (C°) Note)
VXD2130	5.5	50
VXD214$^{0}_{2}$/215$^{0}_{2}$	4.5	45
VXD226$^{0}_{2}$/227$^{0}_{2}$	7	45
VXD238$^{0}_{2}$/239$^{0}_{2}$	10.5	60

AC Specification (Class B coil, with a full-wave rectifier)

Model	Apparent power (VA)*	Temperature rise (C°) Note)
VXD21	7	55
VXD22	9.5	60
VXD23	12	65

* There is no difference in apparent power due to the inrush, energization, or frequency of the power, since the AC coil uses a rectifying circuit.

AC Specification (Class B coil)

Model	Frequency (Hz)	Apparent power (VA) Inrush	Apparent power (VA) Energized	Temperature rise (C°) Note)
VXD21	50	19	9	45
	60	16	7	40
VXD22	50	43	19	55
	60	35	16	50
VXD23	50	62	30	65
	60	52	25	60

* The AC (Class B) coil for the VXD2130 comes with a full wave rectifier.

AC Specification (Class H coil)

Model	Frequency (Hz)	Apparent power (VA) Inrush	Apparent power (VA) Energized	Temperature rise (C°) Note)
VXD21	50	19	9	45
	60	16	7	40
VXD22	50	43	19	55
	60	35	16	50
VXD23	50	62	30	65
	60	52	25	60

How to Order Solenoid Coil Assembly

Table (1) Model and Solenoid Coil Type

Select the coil type from A to C, and refer to "How to Order" below.

Voltage type		AC		AC (with a full-wave rectifier)	DC
Coil insulation type		Class B	Class H	Class B	Class H
(Solenoid valve option)		(Nil, A, B, G, H, J, L)	(D, E, N, P)	(Nil, A, B, G, H, J, L)	(Nil, A, B, G, H, J, L)
Model	**VXD2130**	— Note)	Ⓐ	Ⓒ	Ⓑ
	VXD21 4/5 □	Ⓐ	Ⓐ	Ⓒ	Ⓐ
	VXD22 6/7 □	Ⓐ	Ⓐ	Ⓒ	Ⓐ
	VXD23 8/9 □	Ⓐ	Ⓐ	Ⓒ	Ⓐ

DC, AC (Except VXD2130 AC/Class B) Note 1)

ⒶVX02 1 N — 5 G — □ — □

Series

1	VXD21□□
2	VXD22□□
3	VXD23□□

Rated voltage Note 2)

1	100 VAC 50/60 Hz
2	200 VAC 50/60 Hz
3	110 VAC 50/60 Hz
4	220 VAC 50/60 Hz
5	24 VDC
6	12 VDC
7	240 VAC 50/60 Hz
8	48 VAC 50/60 Hz
J	230 VAC 50/60 Hz

Note 1) The AC (Class B) coil for VXD2130 comes with a full-wave rectifier.
Note 2) Refer to "Table (2)" for the available combinations.

Coil insulation type

Nil	Class B
H	Class H Note)

Note) DIN terminal and DC are not available.

Valve

Symbol	Valve
Nil	N.C.
2	N.O.

Electrical entry

G - Grommet
GS - With grommet surge voltage suppressor

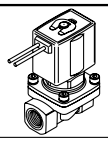

C - Conduit

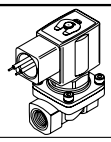

T - With conduit terminal
TS - With conduit terminal and surge voltage suppressor
TL - With conduit terminal and light
TZ - With conduit terminal, surge voltage suppressor and light

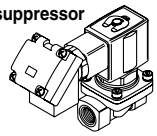

D - DIN
DS - DIN with surge voltage suppressor
DL - DIN with light
DZ - DIN with surge voltage suppressor and light
DO - For DIN (without connector)

Connector

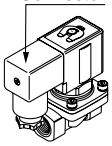

∗ Refer to "Table (2)" for the available combinations between each electrical option and rated voltage.

ⒷVX021N — 5 G — Z

Rated voltage

5	24 VDC
6	12 VDC

Table (2) Rated Voltage Electrical Option

Rated voltage			Class B			Class H		
			S	L	Z	S	L	Z
AC/DC	Voltage symbol	Voltage	With surge voltage suppressor	With light	With light and surge voltage suppressor	With surge voltage suppressor	With light	With light and surge voltage suppressor
AC	1	100 V	●	●	●	●	●	●
	2	200 V	●	●	●	●	●	●
	3	110 V	●	●	●	●	●	●
	4	220 V	●	●	●	●	●	●
	7	240 V	●	—	—	●	—	—
	8	48 V	●	—	—	●	—	—
	J	230 V	●	—	—	●	—	—
DC	5	24 V	●	●	●	DC specification is not available.		
	6	12 V	●	—	—			

∗ Option S, Z are not available since a surge voltage suppressor is integrated into the AC/Class B coil, as a standard.
∗ When changing coils, AC/DC are not interchangeable with each other, and Class B and H coils are also not interchangeable with each other.
AC (with a full-wave rectifier)/DC are interchangeable with each other.

AC/Class B (with a full-wave rectifier)

ⒸVX02 1 N — 1 G R — □

Series

1	VXD21□□
2	VXD22□□
3	VXD23□□

Rated voltage Note 1)

1	100 VAC 50/60 Hz
2	200 VAC 50/60 Hz
3	110 VAC 50/60 Hz
4	220 VAC 50/60 Hz
7	240 VAC 50/60 Hz
8	48 VAC 50/60 Hz
J	230 VAC 50/60 Hz

Note 1) Refer to "Table (2)" for the available combinations.

Valve

Symbol	Valve
Nil	N.C.
2	N.O.

Electrical entry

G - Grommet

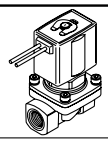

C - Conduit

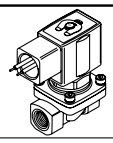

T - With conduit terminal
TL - With conduit terminal and light

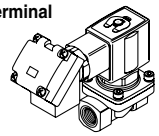

D - DIN
DL - DIN with light
DO - For DIN (without connector)

Connector

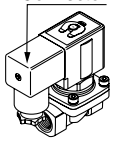

∗ Refer to "Table (2)" for the available combinations between each electrical option and rated voltage.
∗ A surge voltage suppressor is inegrated into the AC/Class B coil, as a standard

● Name plate part no.

AZ-T-VX **Valve model**

↑ Enter by referring to "How to Order"

● Clip part no. (For N.C.)

For VXD21 VX021N-10
For VXD22: VX022N-10
For VXD23: VX023N-10

● Clip part no. (For N.O.)

For VXD21 ETW-7
For VXD22: ETW-8
For VXD23: ETW-9

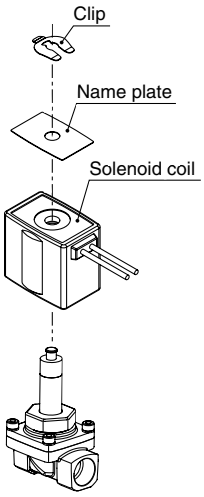

For Water

Model/Valve Specifications

Normally closed (N.C.)

Passage symbol

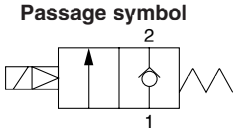

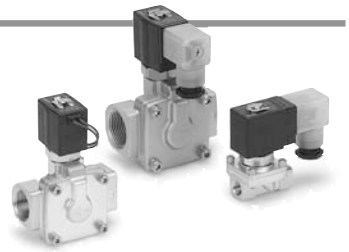

Port size		Orifice size (mmø)	Model	Min. operating pressure differential (MPa)	Max. operating pressure differential (MPa)		Flow characteristics		Max. system pressure (MPa)	Note) Weight (g)
					AC	DC	Av x $10^{-6}m^2$	Cv converted		
Thread	1/4 (8A)	10	**VXD2130-02**	0.02	0.7	0.5	46	1.9	1.5	420
	3/8 (10A)	10	**VXD2130-03**				58	2.4		
		15	**VXD2140-03**		1.0	1.0	110	4.5		670
	1/2 (15A)	10	**VXD2130-04**		0.7	0.5	58	2.4		500
		15	**VXD2140-04**		1.0	1.0	130	5.5		670
	3/4 (20A)	20	**VXD2150-06**				230	9.5		1150
	1 (25A)	25	**VXD2260-10**				310	13		1650
Flange	32A	35	**VXD2270-32**	0.03			550	23		5400
	40A	40	**VXD2380-40**				740	31		6800
	50A	50	**VXD2390-50**				1200	49		8400

Note) Weight of grommet type. Add 10 g for conduit, 30 g for DIN terminal, and 60 g for terminal type respectively.
• Refer to "Glossary of Terms" on front matter 10, for details on the max. operating pressure differential and the max. system pressure.

Normally open (N.O.)

Passage symbol

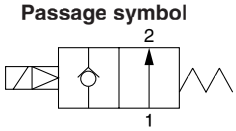

Port size		Orifice size (mmø)	Model	Min. operating pressure differential (MPa)	Max. operating pressure differential (MPa)	Flow characteristics		Max. system pressure (MPa)	Note) Weight (g)
					AC, DC	Av x $10^{-6}m^2$	Cv converted		
Thread	3/8 (10A)	15	**VXD2142-03**	0.02	0.7	110	4.5	1.5	690
	1/2 (15A)		**VXD2142-04**			130	5.5		
	3/4 (20A)	20	**VXD2152-06**			230	9.5		1170
	1 (25A)	25	**VXD2262-10**			310	13		1690
Flange	32A	35	**VXD2272-32**	0.03		550	23		5400
	40A	40	**VXD2382-40**			740	31		6800
	50A	50	**VXD2392-50**			1200	49		8400

Note) Weight of grommet type. Add 10 g for conduit, 30 g for DIN terminal, and 60 g for terminal type respectively.
• Refer to "Glossary of Terms" on front matter 10, for details on the max. operating pressure differential and the max. system pressure.

Operating Fluid and Ambient Temperature

Power source	Operating fluid temperature (°C) Solenoid valve option		Ambient temperature (°C)
	Nil, G, H	**E, P**	
AC	1 to 60	1 to 99	–10 to 60
DC	1 to 40	—	–10 to 40

Note 1) Since the AC/Class B coil (with a full-wave rectifier) uses a rectifying circuit, the fluid and ambient temperature are the same as the DC specifications.
Note 2) With no freezing

Tightness of Valve (Leakage Rate)

Seal material	Leakage rate (With water pressure)	
	1/4 to 1	32A to 50A
NBR, FKM, EPDM	0.2 cm^3/min or less	1 cm^3/min or less

How to Order

DC/AC (except VXD2130 AC/Class B): VXD 21 3 0 □ □ – 02 □ – 5 G 1 – □

AC/Class B coil (with a full-wave rectifier): VXD 21 3 0 □ □ – 02 □ – 1 G R1 – □

∗ The AC (Class B) coil for VXD2130 comes with a full-wave rectifier.

Model
Refer to "Table (1)" shown below for availability.

Orifice size
Refer to "Table (1)" shown below for availability.

Valve/Body configuration

0	N.C. / Single unit
2	N.O. / Single unit

Solenoid valve option
Refer to "Table (2)" shown below for availability.

Suffix

Nil	—
Z	Oil-free

Port size
Refer to "Table (1)" shown below for availability.

Thread type

Nil	Rc
T	NPTF
F	G
N	NPT

Rated voltage

1	100 VAC 50/60 Hz	6	12 VDC
2	200 VAC 50/60 Hz	7	240 VAC 50/60 Hz
3	110 VAC 50/60 Hz	8	48 VAC 50/60 Hz
4	220 VAC 50/60 Hz	J	230 VAC 50/60 Hz
5	24 VDC		

∗ Refer to "Table (3)" shown below for availability.

Refer to page 1 for ordering coil only.

With a full-wave rectifier, surge voltage suppressor

Electrical entry

G - Grommet
GS - With grommet surge voltage suppressor

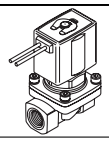

C - Conduit

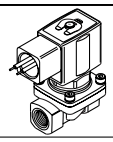

T - With conduit terminal
TS - With conduit terminal and surge voltage suppressor
TL - With conduit terminal and light
TZ - With conduit terminal, surge voltage suppressor and light

D - DIN
DS - DIN with surge voltage suppressor
DL - DIN with light
DZ - DIN with surge voltage suppressor and light
DO - For DIN (without connector)

Connector

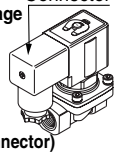

∗ DIN type is available with class B insulation only.

∗ Refer to "Table (3)" for the available combinations between each electrical option (S, L, Z) and rated voltage.
∗ Option S, Z are not available since a surge voltage suppressor is integrated into the AC/Class B coil, as a standard.

Table (1) Port/Orifice Size

Normally closed (N.C.)

Solenoid valve (Port size)					Orifice symbol							Material	
Model		VXD21	VXD22	VXD23	3 (10 mmø)	4 (15 mmø)	5 (20 mmø)	6 (25 mmø)	7 (35 mmø)	8 (40 mmø)	9 (50 mmø)	Body	Seal
Port no. (Port size)	Thread	02 (1/4)	–	–	●	–	–	–	–	–	–	Brass (C37), Stainless steel	NBR FKM EPDM
		03 (3/8)	–	–	●	●	–	–	–	–	–		
		04 (1/2)	–	–	●	●	–	–	–	–	–		
		06 (3/4)	–	–	–	–	●	–	–	–	–		
		–	10 (1)	–	–	–	–	●	–	–	–		
	Flange	–	32 (32A)	–	–	–	–	–	●	–	–	CAC407	
		–	–	40 (40A)	–	–	–	–	–	●	–		
		–	–	50 (50A)	–	–	–	–	–	–	●		

Normally open (N.O.)

Solenoid valve (Port size)					Orifice symbol						Material	
Model		VXD21	VXD22	VXD23	4 (15 mmø)	5 (20 mmø)	6 (25 mmø)	7 (35 mmø)	8 (40 mmø)	9 (50 mmø)	Body	Seal
Port no. (Port size)	Thread	03 (3/8)	–	–	●	–	–	–	–	–	Brass (C37), Stainless steel	NBR FKM EPDM
		04 (1/2)	–	–	●	–	–	–	–	–		
		06 (3/4)	–	–	–	●	–	–	–	–		
		–	10 (1)	–	–	–	●	–	–	–		
	Flange	–	32 (32A)	–	–	–	–	●	–	–	CAC407	
		–	–	40 (40A)	–	–	–	–	●	–		
		–	–	50 (50A)	–	–	–	–	–	●		

Table (2) Solenoid Valve Option

Option symbol	Seal material	Body material/ Shading coil material	Coil insulation type	Note
Nil	NBR	Brass (C37), Cu	B	—
G		Stainless steel, Ag		
E	EPDM	Brass (C37), Cu	H	Heated water (AC only)
P		Stainless steel, Ag		
L	FKM	Stainless steel, Ag	B	High corrosion resistance specification, Oil-free

Table (3) Rated Voltage – Electrical Option

Rated voltage			Class B			Class H		
			S	L	Z	S	L	Z
AC/DC	Voltage symbol	Voltage	With surge voltage suppressor	With light	With light and surge voltage suppressor	With surge voltage suppressor	With light	With light and surge voltage suppressor
AC	1	100 V	●	●	●	●	●	●
	2	200 V	●	●	●	●	●	●
	3	110 V	●	●	●	●	●	●
	4	220 V	●	●	●	●	●	●
	7	240 V	●	–	–	●	–	–
	8	48 V	●	–	–	●	–	–
	J	230 V	●	–	–	●	–	–
DC	5	24 V	●	●	●	DC specification is not available.		
	6	12 V	●	–	–			

Note: Option S, Z are not available as surge voltage suppressor is integrated into the AC/Class B coil, as a standard.

For Oil

Model/Valve Specifications

Normally closed (N.C.)

Passage symbol

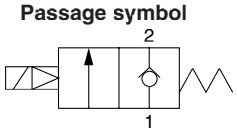

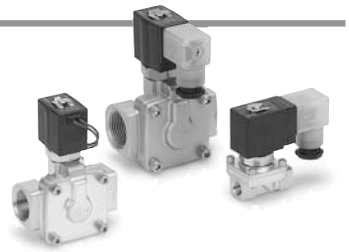

Port size		Orifice size (mmø)	Model	Min. operating pressure differential (MPa)	Max. operating pressure differential (MPa)		Flow characteristics		Max. system pressure (MPa)	Note) Weight (g)
					AC	DC	Av x $10^{-6}m^2$	Cv converted		
Thread	1/4 (8A)	10	**VXD2130-02**	0.02	0.5	0.4	46	1.9	1.5	420
	3/8 (10A)	10	**VXD2130-03**				58	2.4		
		15	**VXD2140-03**		0.7	0.7	110	4.5		670
	1/2 (15A)	10	**VXD2130-04**		0.5	0.4	58	2.4		500
		15	**VXD2140-04**		0.7	0.7	130	5.5		670
	3/4 (20A)	20	**VXD2150-06**				230	9.5		1150
	1 (25A)	25	**VXD2260-10**				310	13		1650
Flange	32A	35	**VXD2270-32**	0.03			550	23		5400
	40A	40	**VXD2380-40**				740	31		6800
	50A	50	**VXD2390-50**				1200	49		8400

Note) Weight of grommet type. Add 10 g for conduit, 30 g for DIN terminal, and 60 g for terminal type respectively.
• Refer to "Glossary of Terms" on front matter 10, for details on the max. operating pressure differential and the max. system pressure.

Normally open (N.O.)

Passage symbol

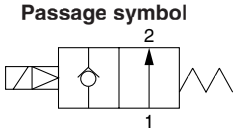

Port size		Orifice size (mmø)	Model	Min. operating pressure differential (MPa)	Max. operating pressure differential (MPa)	Flow characteristics		Max. system pressure (MPa)	Note) Weight (g)
					AC, DC	Av x $10^{-6}m^2$	Cv converted		
Thread	3/8 (10A)	15	**VXD2142-03**	0.02	0.6	110	4.5	1.5	690
	1/2 (15A)		**VXD2142-04**			130	5.5		
	3/4 (20A)	20	**VXD2152-06**			230	9.5		1170
	1 (25A)	25	**VXD2262-10**			310	13		1690
Flange	32A	35	**VXD2272-32**	0.03		550	23		5400
	40A	40	**VXD2382-40**			740	31		6800
	50A	50	**VXD2392-50**			1200	49		8400

Note) Weight of grommet type. Add 10 g for conduit, 30 g for DIN terminal, and 60 g for terminal type respectively.
• Refer to "Glossary of Terms" on front matter 10, for details on the max. operating pressure differential and the max. system pressure.

Operating Fluid and Ambient Temperature

Power source	Operating fluid temperature (°C) Solenoid valve option		Ambient temperature (°C)
	A, H	**D, N**	
AC	–5 to 60	–5 to 100	–10 to 60
DC	–5 to 40	—	–10 to 40

Note 1) Dynamic viscosity: 50 mm^2/s or less
Note 2) Since the AC/Class B coil (with a full-wave rectifier) uses a rectifying circuit, the fluid and ambient temperature are the same as the DC specifications.

Tightness of Valve (Leakage Rate)

Seal material	Leakage rate (With oil pressure)	
	1/4 to 1	32A to 50A
FKM	0.2 cm^3/min or less	1 cm^3/min or less

How to Order

DC/AC (except VXD2130 AC/Class B): VXD 21 3 0 □ □ – 02 □ – 5 G 1 – □

AC/Class B coil (with a full-wave rectifier): VXD 21 3 0 □ □ – 02 □ – 1 G R1 – □

∗ The AC (Class B) coil for VXD2130 comes with a full-wave rectifier.

Model
Refer to "Table (1)" shown below for availability.

Orifice size
Refer to "Table (1)" shown below for availability.

Valve/Body configuration

0	N.C. / Single unit
2	N.O. / Single unit

Solenoid valve option
Refer to "Table (2)" shown below for availability.

Suffix

Nil	—
Z	Oil-free

Port size
Refer to "Table (1)" shown below for availability.

Thread type

Nil	Rc
T	NPTF
F	G
N	NPT

Rated voltage

1	100 VAC 50/60 Hz	6	12 VDC
2	200 VAC 50/60 Hz	7	240 VAC 50/60 Hz
3	110 VAC 50/60 Hz	8	48 VAC 50/60 Hz
4	220 VAC 50/60 Hz	J	230 VAC 50/60 Hz
5	24 VDC		

∗ Refer to "Table (3)" shown below for availability.

Refer to page 1 for ordering coil only.

Bracket

Nil	None
B	With bracket

∗ Bracket is not removable.

With a full-wave rectifier, surge voltage suppressor

Electrical entry

G - Grommet
GS - With grommet surge voltage suppressor

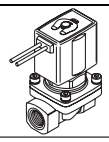

C - Conduit

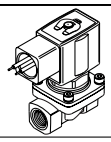

T - With conduit terminal
TS - With conduit terminal and surge voltage suppressor
TL - With conduit terminal and light
TZ - With conduit terminal, surge voltage suppressor and light

D - DIN
DS - DIN with surge voltage suppressor
DL - DIN with light
DZ - DIN with surge voltage suppressor and light
DO - For DIN (without connector)

Connector

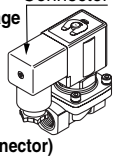

∗ DIN type is available with class B insulation only.

∗ Refer to "Table (3)" for the available combinations between each electrical option (S, L, Z) and rated voltage.
∗ Option S, Z are not available since a surge voltage suppressor is integrated into the AC/Class B coil, as a standard.

Table (1) Port/Orifice Size

Normally closed (N.C.)

Solenoid valve (Port size)					Orifice symbol							Material	
Model		VXD21	VXD22	VXD23	3 (10 mmø)	4 (15 mmø)	5 (20 mmø)	6 (25 mmø)	7 (35 mmø)	8 (40 mmø)	9 (50 mmø)	Body	Seal
Port no. (Port size)	Thread	02 (1/4)	–	–	●	–	–	–	–	–	–	Brass (C37), Stainless steel	NBR FKM EPDM
		03 (3/8)	–	–	●	●	–	–	–	–	–		
		04 (1/2)	–	–	●	●	–	–	–	–	–		
		06 (3/4)	–	–	–	–	●	–	–	–	–		
		–	10 (1)	–	–	–	–	●	–	–	–		
	Flange	–	32 (32A)	–	–	–	–	–	●	–	–	CAC407	
		–	–	40 (40A)	–	–	–	–	–	●	–		
		–	–	50 (50A)	–	–	–	–	–	–	●		

Normally open (N.O.)

Solenoid valve (Port size)					Orifice symbol						Material	
Model		VXD21	VXD22	VXD23	4 (15 mmø)	5 (20 mmø)	6 (25 mmø)	7 (35 mmø)	8 (40 mmø)	9 (50 mmø)	Body	Seal
Port no. (Port size)	Thread	03 (3/8)	–	–	●	–	–	–	–	–	Brass (C37), Stainless steel	NBR FKM EPDM
		04 (1/2)	–	–	●	–	–	–	–	–		
		06 (3/4)	–	–	–	●	–	–	–	–		
		–	10 (1)	–	–	–	●	–	–	–		
	Flange	–	32 (32A)	–	–	–	–	●	–	–	CAC407	
		–	–	40 (40A)	–	–	–	–	●	–		
		–	–	50 (50A)	–	–	–	–	–	●		

Table (2) Solenoid Valve Option

Option symbol	Seal material	Body material/ Shading coil material	Coil insulation type
A	FKM	Brass (C37), Cu	B
H		Stainless steel, Ag	
D		Brass (C37), Cu	H
N		Stainless steel, Ag	

Table (3) Rated Voltage / Electrical Option

Rated voltage			Class B			Class H		
			S	L	Z	S	L	Z
AC/DC	Voltage symbol	Voltage	With surge voltage suppressor	With light	With light and surge voltage suppressor	With surge voltage suppressor	With light	With light and surge voltage suppressor
AC	1	100 V	●	●	●	●	●	●
	2	200 V	●	●	●	●	●	●
	3	110 V	●	●	●	●	●	●
	4	220 V	●	●	●	●	●	●
	7	240 V	●	–	–	●	–	–
	8	48 V	●	–	–	●	–	–
	J	230 V	●	–	–	●	–	–
DC	5	24 V	●	●	●	DC specification is not available.		
	6	12 V	●	–	–			

Note) Option S, Z are not available as surge voltage suppressor is integrated into the AC/Class B coil, as a standard.

For Air

(Inert gas)

Model/Valve Specifications

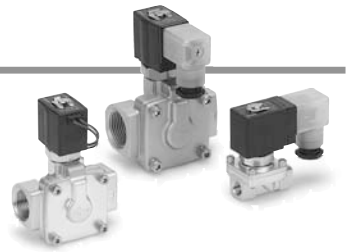

Normally closed (N.C.)

Passage symbol

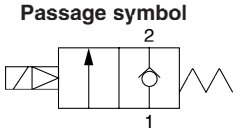

Port size		Orifice size (mmø)	Model	Min. operating pressure differential (MPa)	Max. operating pressure differential (MPa)		Flow characteristics			Max. system pressure (MPa)	Note) Weight (g)
					AC	DC	C	b	Cv		
Thread	1/4 (8A)	10	**VXD2130-02**	0.02	0.9	0.7	8.5	0.35	2.0	1.5	420
	3/8 (10A)	10	**VXD2130-03**				9.2		2.4		
		15	**VXD2140-03**		1.0	1.0	18.0		5.0		670
	1/2 (15A)	10	**VXD2130-04**		0.9	0.7	9.2		2.4		500
		15	**VXD2140-04**		1.0	1.0	20.0		5.5		670
	3/4 (20A)	20	**VXD2150-06**				38.0	0.30	9.5		1150

Port size		Orifice size (mmø)	Model	Min. operating pressure differential (MPa)	Max. operating pressure differential (MPa)	Flow characteristics	Max. system pressure (MPa)	Note) Weight (g)
					AC, DC	Effective area (mm^2)		
Thread	1 (25A)	25	**VXD2260-10**	0.02	1.0	225	1.5	1650
Flange	32A	35	**VXD2270-32**	0.03		415		5400
	40A	40	**VXD2380-40**			560		6800
	50A	50	**VXD2390-50**			880		8400

Note) Weight of grommet type. Add 10 g for conduit, 30 g for DIN terminal, and 60 g for terminal type respectively
• Refer to "Glossary of Terms" on front matter 10, for details on the max. operating pressure differential and the max. system pressure.

Normally open (N.O.)

Passage symbol

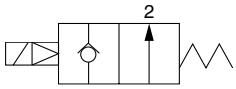

Port size		Orifice size (mmø)	Model	Min. operating pressure differential (MPa)	Max. operating pressure differential (MPa)	Flow characteristics			Max. system pressure (MPa)	Note) Weight (g)
					AC, DC	C	b	Cv		
Thread	3/8 (10A)	15	**VXD2142-03**	0.02	0.7	18.0	0.35	5.0	1.5	690
	1/2 (15A)		**VXD2142-04**			20.0		5.5		
	3/4 (20A)	20	**VXD2152-06**			38.0	0.30	9.5		1170

Port size		Orifice size (mmø)	Model	Min. operating pressure differential (MPa)	Max. operating pressure differential (MPa)	Flow characteristics	Max. system pressure (MPa)	Note) Weight (g)
					AC, DC	Effective area (mm^2)		
Thread	1 (25A)	25	**VXD2262-10**	0.02	0.7	225	1.5	1690
Flange	32A	35	**VXD2272-32**	0.03		415		5400
	40A	40	**VXD2382-40**			560		6800
	50A	50	**VXD2392-50**			880		8400

Note) Weight of grommet type. Add 10 g for conduit, 30 g for DIN terminal, and 60 g for terminal type respectively
• Refer to "Glossary of Terms" on front matter 10, for details on the max. operating pressure differential and the max. system pressure.

Operating Fluid and Ambient Temperature

Power source	Operating fluid temperature (°C)	Ambient temperature (°C)
	Solenoid valve option	
	Nil, G	
AC	–10 Note) to 60	–10 to 60
DC	–10 to 60	–10 to 40

Note) Dew point temperature: –10°C or less

Tightness of Valve (Leakage Rate)

Seal material	Leakage rate (Air)	
	1/4 to 1	32A to 50A
NBR, FKM	2 cm^3/min or less	10 cm^3/min or less

How to Order (Single Unit)

DC VXD 21 3 0 □ □ – 02 □ – 5 G 1 – □

AC/Class B coil (with a full-wave rectifier) VXD 21 3 0 □ □ – 02 □ – 1 G R1 – □

∗ The AC (Class B) coil for VXD2130 comes with a full-wave rectifier.

Model
Refer to "Table (1)" shown below for availability.

Orifice size
Refer to "Table (1)" shown below for availability.

Valve/Body configuration

0	N.C. / Single unit
2	N.O. / Single unit

Solenoid valve option
Refer to "Table (2)" shown below for availability.

Suffix

Nil	—
Z	Oil-free

Port size
Refer to "Table (1)" shown below for availability.

Thread type

Nil	Rc
T	NPTF
F	G
N	NPT

Rated voltage

1	100 VAC 50/60 Hz	6	12 VDC
2	200 VAC 50/60 Hz	7	240 VAC 50/60 Hz
3	110 VAC 50/60 Hz	8	48 VAC 50/60 Hz
4	220 VAC 50/60 Hz	J	230 VAC 50/60 Hz
5	24 VDC		

∗ Refer to "Table (3)" shown below for availability.

Refer to page 1 for ordering coil only.

Bracket

Nil	None
B	With bracket

∗ Bracket is not removable.

With a full-wave rectifier, surge voltage suppressor

Electrical entry

G - Grommet
GS - With grommet surge voltage suppressor

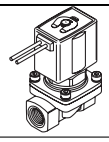

C - Conduit

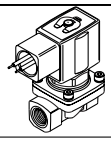

T - With conduit terminal
TS - With conduit terminal and surge voltage suppressor
TL - With conduit terminal and light
TZ - With conduit terminal, surge voltage suppressor and light

D - DIN
DS - DIN with surge voltage suppressor
DL - DIN with light
DZ - DIN with surge voltage suppressor and light
DO - For DIN (without connector)

Connector

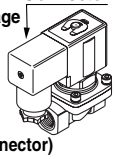

∗ DIN type is available with class B insulation only.

∗ Refer to "Table (3)" for the available combinations between each electrical option (S, L, Z) and rated voltage.
∗ Option S, Z are not available since a surge voltage suppressor is integrated into the AC/Class B coil, as a standard.

Table (1) Port/Orifice Size

Normally closed (N.C.)

Solenoid valve (Port size)					Orifice symbol							Material	
Model		VXD21	VXD22	VXD23	3 (10 mmø)	4 (15 mmø)	5 (20 mmø)	6 (25 mmø)	7 (35 mmø)	8 (40 mmø)	9 (50 mmø)	Body	Seal
Port no. (Port size)	Thread	02 (1/4)	–	–	●	–	–	–	–	–	–	Brass (C37), Stainless steel	NBR
		03 (3/8)	–	–	●	●	–	–	–	–	–		
		04 (1/2)	–	–	●	●	–	–	–	–	–		
		06 (3/4)	–	–	–	–	●	–	–	–	–		
		–	10 (1)	–	–	–	–	●	–	–	–		
	Flange	–	32 (32A)	–	–	–	–	–	●	–	–	CAC407	
		–	–	40 (40A)	–	–	–	–	–	●	–		
		–	–	50 (50A)	–	–	–	–	–	–	●		

Normally open (N.O.)

Solenoid valve (Port size)					Orifice symbol						Material	
Model		VXD21	VXD22	VXD23	4 (15 mmø)	5 (20 mmø)	6 (25 mmø)	7 (35 mmø)	8 (40 mmø)	9 (50 mmø)	Body	Seal
Port no. (Port size)	Thread	03 (3/8)	–	–	●	–	–	–	–	–	Brass (C37), Stainless steel	NBR
		04 (1/2)	–	–	●	–	–	–	–	–		
		06 (3/4)	–	–	–	●	–	–	–	–		
		–	10 (1)	–	–	–	●	–	–	–		
	Flange	–	32 (32A)	–	–	–	–	●	–	–	CAC407	
		–	–	40 (40A)	–	–	–	–	●	–		
		–	–	50 (50A)	–	–	–	–	–	●		

Table (2) Solenoid Valve Option

Option symbol	Seal material	Body material/ Shading coil material	Coil insulation type	Note
Nil	NBR	Brass (C37), Cu	B	—
G		Stainless steel, Ag		

Table (3) Rated Voltage/Electrical Option

Rated voltage			Class B			Class H		
			S	L	Z	S	L	Z
AC/DC	Voltage symbol	Voltage	With surge voltage suppressor	With light	With light and surge voltage suppressor	With surge voltage suppressor	With light	With light and surge voltage suppressor
AC	1	100 V	●	●	●	●	●	●
	2	200 V	●	●	●	●	●	●
	3	110 V	●	●	●	●	●	●
	4	220 V	●	●	●	●	●	●
	7	240 V	●	–	–	●	–	–
	8	48 V	●	–	–	●	–	–
	J	230 V	●	–	–	●	–	–
DC	5	24 V	●	●	●	DC specification is not available.		
	6	12 V	●	–	–			

Note) Option S, Z are not available as surge voltage suppressor is integrated into the AC/Class B coil, as a standard.

Construction

Normally closed (N.C.)

Body material Brass (C37) (32A or more: CAC407), Stainless steel

VXD2130 (10A)

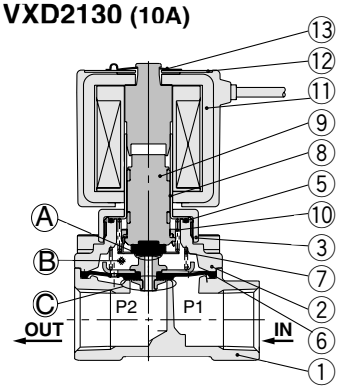

VXD2140/2150/2260 (15A to 25A)

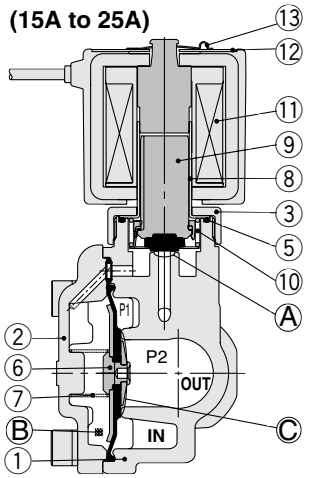

VXD2270/2380/2390 (32A to 50A)

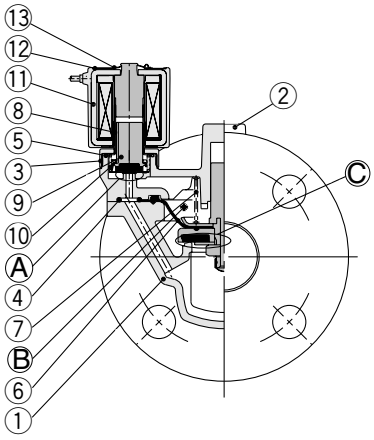

Operation

<Valve opened> When the coil ⑪ is energized, the armature assembly ⑨ is attracted into the core of the tube assembly ⑧ and the pilot valve Ⓐ opens. Then the pressure in the pressure action chamber Ⓑ falls to open the main valve Ⓒ.

<Valve closed> When the coil ⑪ is not energized, the pilot valve Ⓐ is closed and the pressure in the pressure action chamber Ⓑ rises and the main valve Ⓒ closes.

Component Parts

No.	Description	Size	Material	
			Standard	Option
1	Body	10A to 25A	Brass (C37)	Stainless steel
		32A to 50A	CAC407	
2	Bonnet	10A to 25A	Brass (C37)	Stainless steel
		32A to 50A	CAC407	
3	Nut	10A to 50A	Brass (C37)	Brass (C37), Ni plated
4	O-ring	32A to 50A	NBR	FKM, EPDM
5	O-ring	10A to 50A	NBR	FKM, EPDM
6	Diaphragm assembly	10A to 25A	Stainless steel, NBR	Stainless steel, FKM Stainless steel, EPDM
		32A to 50A	Stainless steel, Brass (C37), NBR	Stainless steel, FKM, EPDM
7	Valve spring	10A to 50A	Stainless steel	
8	Tube assembly	10A to 25A	Stainless steel, Cu	Stainless steel, Ag
		32A to 50A		
9	Armature assembly	10A	Stainless steel, PPS, NBR	Stainless steel, PPS, FKM Stainless steel, EPDM
		15A to 50A		
10	Reurn spring	10A to 50A	Stainless steel	
11	Solenoid coil	10A to 50A	Class B molded	Class H molded
12	Name plate	10A to 50A	Aluminum	
13	Clip	10A to 50A	SK	

Normally open (N.O.)

Body material: Brass (C37) (32A or more: CAC407), Stainless steel

VXD2142/2152/2262 (15A to 25A)

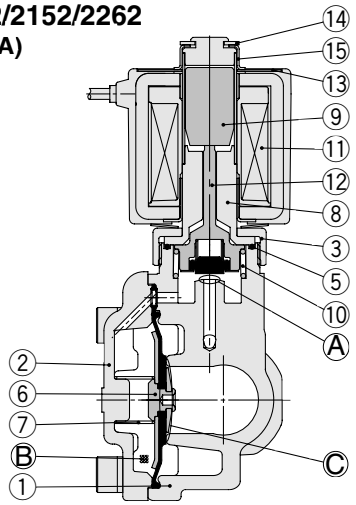

VXD2272/2382/2392 (32A to 50A)

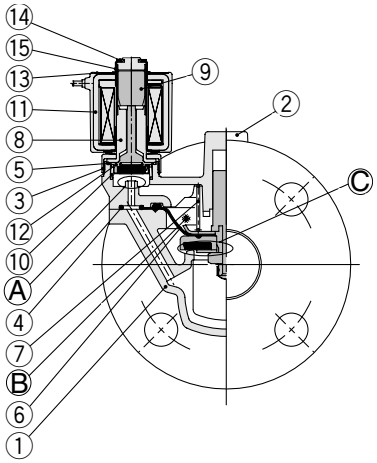

Operation

<Valve opened> When the coil ⑪ is energized, the opened pilot Ⓐ closes, the pressure in pressure action chamber Ⓑ rises and the main valve Ⓒ closes.

<Valve closed> When the coil ⑪ is not energized, the closed pilot valve Ⓐ opens, the pressure in pressure action chamber Ⓑ drops and the main valve Ⓒ opens.

Component Parts

No.	Description	Size	Material	
			Standard	Option
1	Body	15A to 25A	Brass (C37)	Stainless steel
		32A to 50A	CAC407	
2	Bonnet	15A to 25A	Brass (C37)	Stainless steel
		32A to 50A	CAC407	
3	Nut	15A to 25A	Brass (C37)	Brass (C37), Ni plated
4	O-ring	32A to 50A	NBR	FKM, EPDM
5	O-ring	15A to 50A	NBR	FKM, EPDM
6	Diaphragm assembly	15A to 25A	Stainless steel, NBR	Stainless steel, FKM Stainless steel, EPDM
		32A to 50A	Stainless steel, NBR	Stainless steel, FKM, EPDM
7	Valve spring	15A to 25A	Stainless steel	
8	Tube assembly	15A to 25A	Stainless steel, Cu	Stainless steel, Ag
		32A to 50A		
9	Armature assembly	10A to 50A	Stainless steel	
10	Reurn spring	15A to 50A	Stainless steel	
11	Solenoid coil	15A to 50A	Class B molded	Class H molded
12	Push rod assembly	15A to 50A	NBR, PPS, Stainless steel	FKM, EPDM, Stainless steel
13	Name plate	15A to 50A	Aluminum	
14	Clip	15A to 50A	SK	
15	Cover	15A to 50A	Stainless steel	

The materials in parentheses are the seal materials.

Dimensions

Normally closed (N.C.): VXD2130

Grommet: G

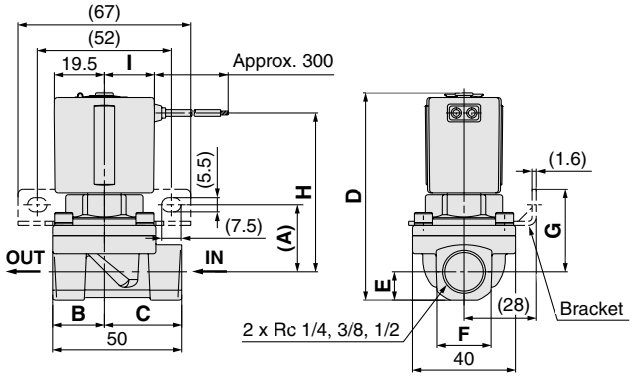

Conduit: C

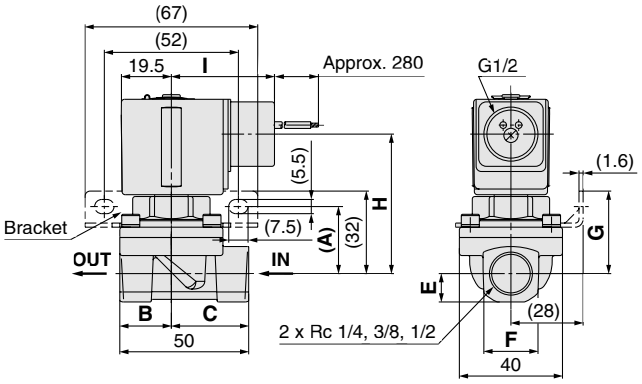

DIN terminal: D

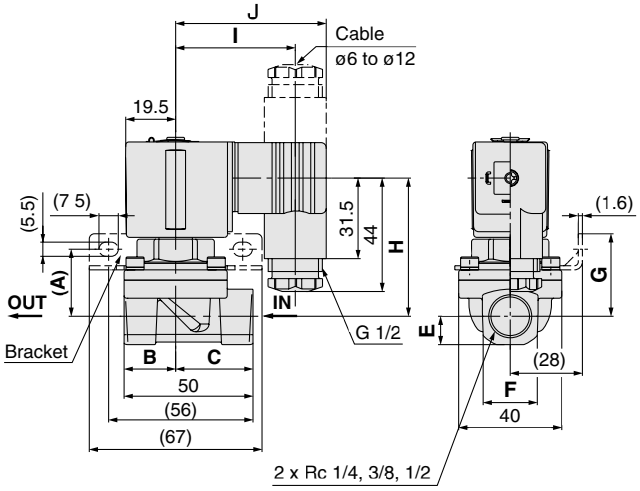

Conduit terminal: T

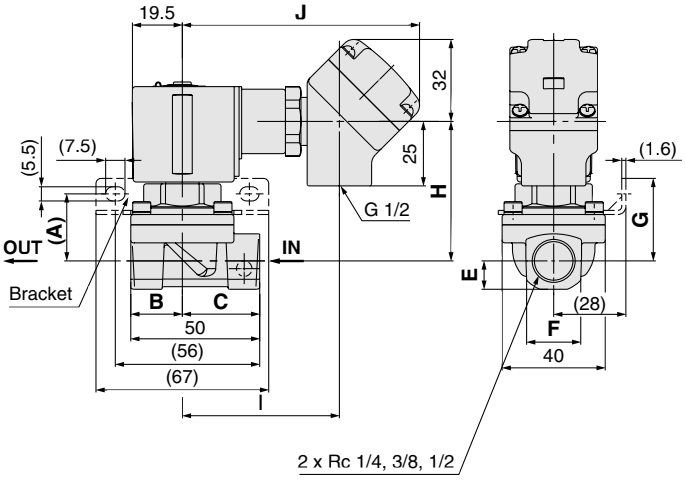

VXD2130-04

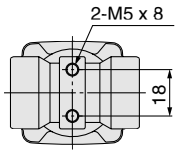

(mm)

Model	Port size P	A	B	C	D	E	F	G	Electrical entry (DC, AC/Class H coil)									
									Grommet		Conduit		DIN terminal			Conduit terminal		
Normally closed									H	I	H	I	H	I	J	H	I	J
VXD2130	1/4, 3/8	26	20	30	80.5	11	21	32	62	19.5	54.5	40	54	46.5	58.5	54.5	61	92
	1/2	28	24	26	86	14.5	28	34	64	19.5	56.5	40	56	46.5	58.5	56.5	61	92

Model	Electrical entry (AC/Class B coil)*									
	Grommet		Conduit		DIN terminal			Conduit terminal		
Normally closed	H	I	H	I	H	I	J	H	I	J
VXD2130	58	30	53	48.5	54	53.5	65.5	53	69.5	100.5
	60	30	55	48.5	56	53.5	65.5	55	69.5	100.5

* Coil with a full-wave rectifier (electrical option "R")

Dimensions

Normally closed (N.C.): VXD2140/2150/2260
Normally open (N.O.): VXD2142/2152/2262

Grommet: G

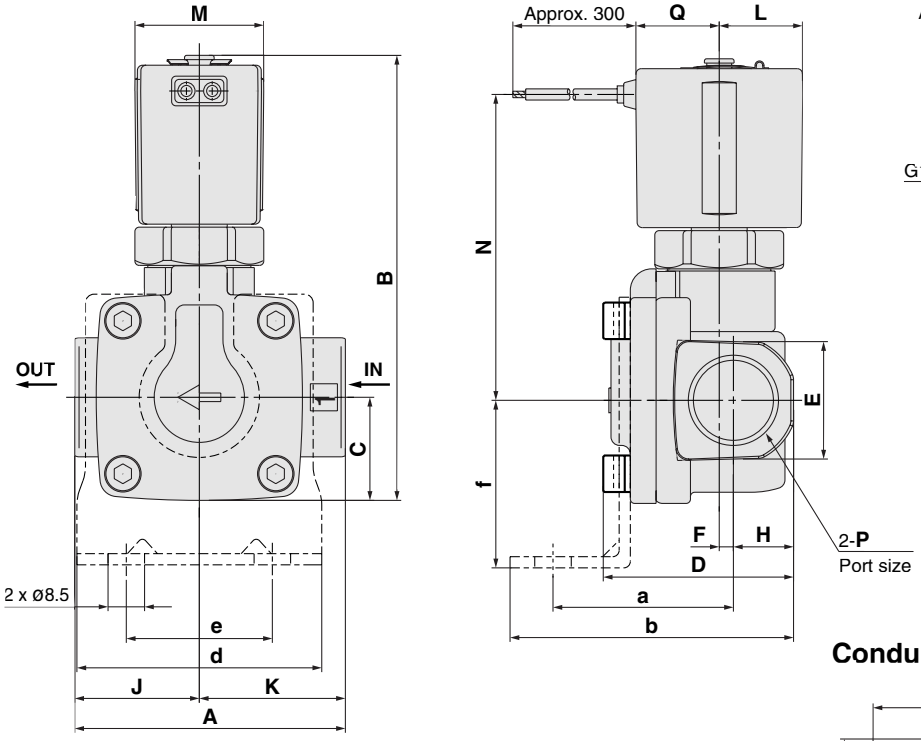

Conduit: C

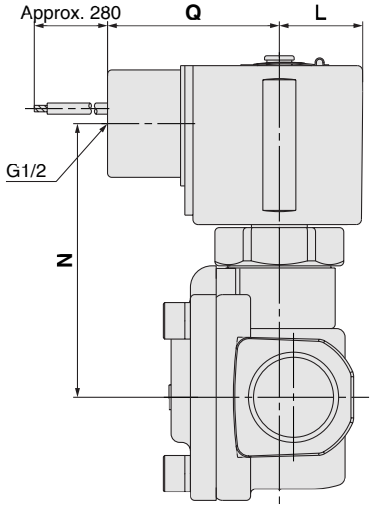

Conduit terminal: T

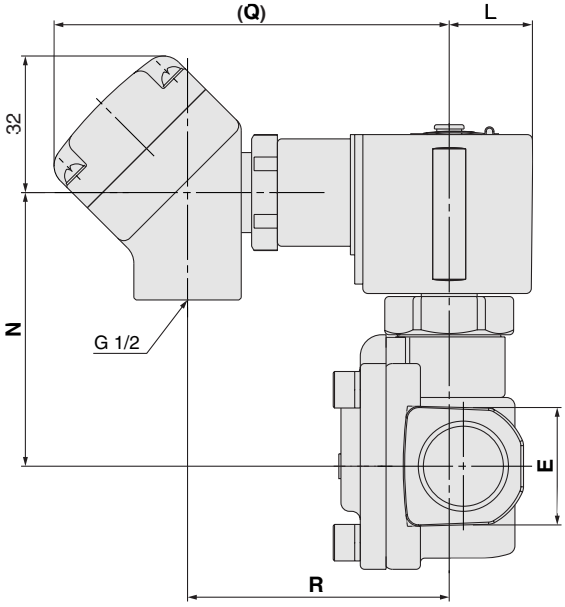

DIN terminal: D

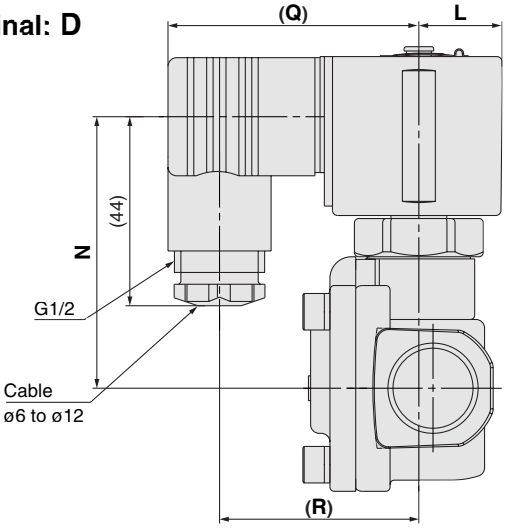

(mm)

Model		Port size P	A	B	C	D	E	F	H	J	K	L	M	Electrical entry (DC, AC)									
														Grommet		Conduit		DIN terminal			Conduit terminal		
Normally closed	Normally open	Rc												N	Q	N	Q	N	Q	R	N	Q	R
VXD2140	**VXD2142**	3/8, 1/2	63	104 (110.5)	24	44.5	28	3.5	14	29	34	19.5	30	71.5	19.5	64	40	63.5	58.5	46.5	64	92	61
VXD2150	**VXD2152**	3/4	80	115.5 (122)	29	51.5	35	4.5	17	37	43	19.5	30	78	19.5	70.5	40	70	58.5	46.5	70.5	92	61
VXD2260	**VXD2262**	1	90	133 (140.5)	33	60	42	4.5	20	43	47	22.5	35	92	22.5	84.5	43	84	61.5	49.5	84.5	95	64

denotes the value for N O.

(mm)

Model		Port size P	Bracket mounting				
Normally closed	Normally open	Rc	a	b	d	e	f
VXD2140	**VXD2142**	3/8, 1/2	42	66	57	34	39
VXD2150	**VXD2152**	3/4	46	73	74	51	45.5
VXD2260	**VXD2262**	1	56	86	81	58	49.5

(mm)

Model		Electrical entry (AC/Class B coil)*									
		Grommet		Conduit		DIN terminal			Conduit terminal		
Normally closed	Normally open	N	Q	N	Q	N	Q	R	N	Q	R
VXD2140	**VXD2142**	67.5	37	62.5	48.5	63.5	65.5	53.5	62.5	100.5	69.5
VXD2150	**VXD2152**	74	37	69	48.5	70	65.5	53.5	69	100.5	69.5
VXD2260	**VXD2262**	88	40	83	51.5	84	68.5	56.5	83	103.5	72.5

* Coil with a full-wave rectifier (electrical option "R")

Dimensions

Normally closed (N.C.): VXD2270/2380/2390
Normally open (N.O.): VXD2272/2382/2392

Grommet: G

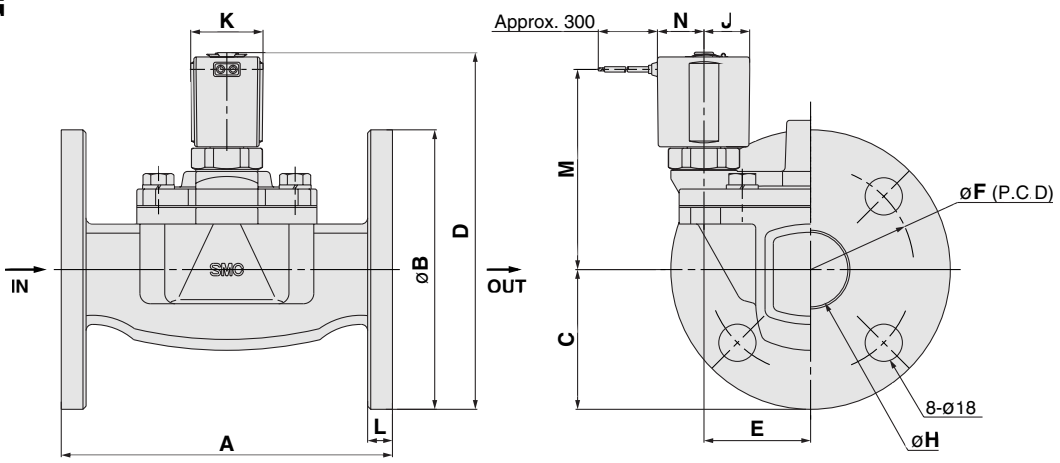

Conduit: C

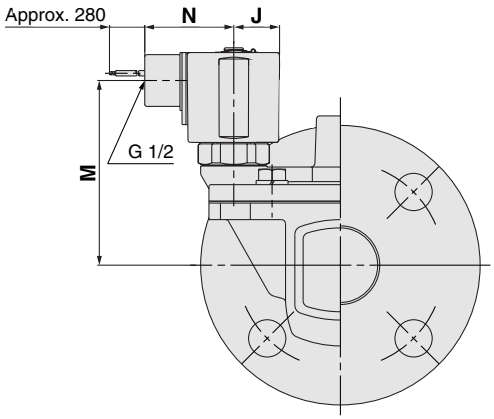

DIN terminal D

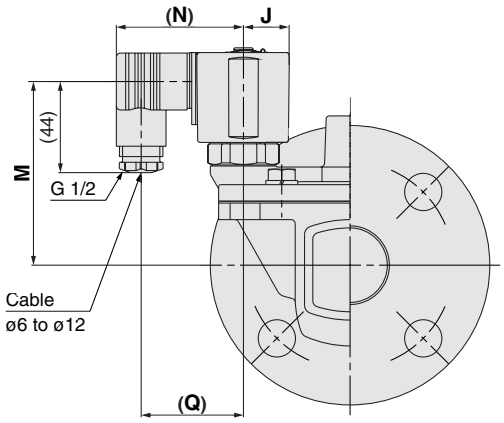

Conduit terminal T

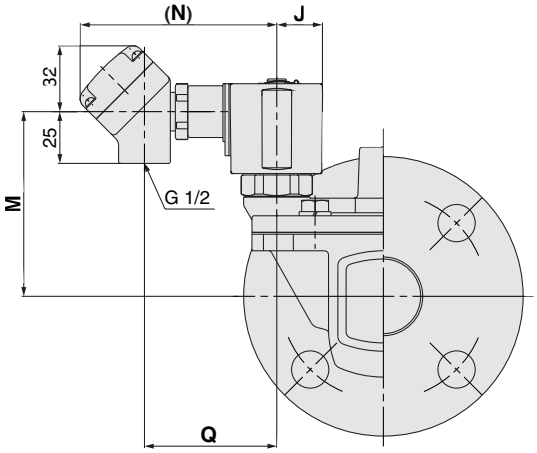

(mm)

Model		Electrical entry (AC/Class B coil)*									
		Grommet		Conduit		DIN terminal			Conduit terminal		
Normally closed	Normally open	M	N	M	N	M	N	Q	M	N	Q
VXD2270	**VXD2272**	93	33	88	51.5	89	68.5	56.5	88	103.5	72.5
VXD2380	**VXD2382**	103	36	98	54	99	71	59	98	106	75
VXD2390	**VXD2392**	108.5	36	103.5	54	104.5	71	59	103.5	106	75

) denotes the value for N.O
∗ Coil with a full-wave rectifier (electrical option "R")

(mm)

Model		Applicable flange	A	B	C	D	E	F	H	J	K	L	Electrical entry (DC, AC)									
													Grommet		Conduit		DIN terminal			Conduit terminal		
Normally closed	Normally open												M	N	M	N	M	N	Q	M	N	Q
VXD2270	**VXD2272**	32A	160	135	67.5	172.5 (180)	51.5	100	36	22.5	35	12	97	22.5	89.5	43	89	61.5	49.5	89.5	95	64
VXD2380	**VXD2382**	40A	170	140	70	185 (192.5)	54.5	105	42	25	40	14	106.5	25.5	99	46	98.5	64	52	99	98	66.5
VXD2390	**VXD2392**	50A	180	155	77.5	198.5 (205.5)	59	120	52	25	40	14	112.5	25.5	105	46	104.5	64	52	105	98	66.5

denotes the value for N O.